NPS Form 10-900
(Rev. 8-86)

OMB No. 1024-0018

United States Department of the Interior
National Park Service

RECEIVED

APR 04 1988

NATIONAL REGISTER

National Register of Historic Places Registration Form

This form is for use in nominating or requesting determinations of eligibility for individual properties or districts. See instructions in *Guidelines for Completing National Register Forms* (National Register Bulletin 16). Complete each item by marking "x" in the appropriate box or by entering the requested information. If an item does not apply to the property being documented, enter "N/A" for "not applicable." For functions, styles, materials, and areas of significance, enter only the categories and subcategories listed in the instructions. For additional space use continuation sheets (Form 10-900a). Type all entries.

1. Name of Property

historic name Fairfield Rice Mill Chimney

other names/site number

2. Location

street & number E of Georgetown off U.S. Highway 17 [ ] not for publication

city, town Georgetown [X] vicinity

state South Carolina code 045 county Georgetown code 043 zip code

3. Classification

Ownership of Property	Category of Property	Number of Resources within Property	
		Contributing	Noncontributing
[X] private	[ ] building(s)		buildings
[ ] public-local	[ ] district		sites
[ ] public-State	[ ] site	1	structures
[ ] public-Federal	[X] structure		objects
	[ ] object	1	0 Total

Name of related multiple property listing:
Georgetown County Rice Culture, c. 1750-c. 1910

Number of contributing resources previously listed in the National Register 0

4. State/Federal Agency Certification

As the designated authority under the National Historic Preservation Act of 1966, as amended, I hereby certify that this [X] nomination [ ] request for determination of eligibility meets the documentation standards for registering properties in the National Register of Historic Places and meets the procedural and professional requirements set forth in 36 CFR Part 60. In my opinion, the property [X] meets [ ] does not meet the National Register criteria. [ ] See continuation sheet.

Mary Watson Edmonds — 8/11/88
Signature of certifying official — Date

for George L. Vogt, State Historic Preservation Officer, S.C. Dept. of Archives & History
State or Federal agency and bureau

In my opinion, the property [ ] meets [ ] does not meet the National Register criteria. [ ] See continuation sheet.

Signature of commenting or other official — Date

State or Federal agency and bureau

5. National Park Service Certification

I, hereby, certify that this property is:

[X] entered in the National Register.
[ ] See continuation sheet.
[ ] determined eligible for the National Register. [ ] See continuation sheet.
[ ] determined not eligible for the National Register.
[ ] removed from the National Register.
[ ] other, (explain:)

Amy Schlagel — 10/3/88

Signature of the Keeper — Date of Action

6. Function or Use

Historic Functions (enter categories from instructions)
Agriculture/Subsistence; Processing

Current Functions (enter categories from instructions)
Vacant/Not in use

7. Description

Architectural Classification
(enter categories from instructions)

N/A

Materials (enter categories from instructions)

foundation Brick
walls
roof
other Brick

Describe present and historic physical appearance.

This chimney conforms to the general description under property type "Rice Processing Facilities" and property subtype "Rice Mills and Chimneys."

It is one of two extant rice mill chimneys in Georgetown County (the Laurel Hill rice mill chimney, already listed in the National Register as part of the Brookgreen Gardens nomination, is the other) which are not square-shaped. The chimney is approximately 35' high, an average height for this property subtype. It is octagonal, having eight sides each 2'8" wide at the base, gradually tapering to approximately 1'6" wide at the top. The original corbeling and a portion of the bricks at the top are missing. An arched opening for the firebox is located at the west side of the chimney, 1'8" high and 2'1" wide. The base above ground level is 1'8" high, consisting of five brick courses. (See Figure 1) The pointing has been repaired and stabilized in places by the addition of concrete. These repairs do not impair the chimney's registration.

☐ See continuation sheet

8. Statement of Significance

Certifying official has considered the significance of this property in relation to other properties:

[X] nationally [ ] statewide [ ] locally

Applicable National Register Criteria [X] A [ ] B [X] C [ ] D

Criteria Considerations (Exceptions) [ ] A [ ] B [ ] C [ ] D [ ] E [ ] F [ ] G

Areas of Significance (enter categories from instructions)	Period of Significance	Significant Dates
Agriculture	c. 1830 - c. 1860	N/A
Industry		
Engineering		

Cultural Affiliation
N/A

Significant Person

Architect/Builder
Unknown

State significance of property, and justify criteria, criteria considerations, and areas and periods of significance noted above.

This rice mill chimney is significant as one of seven known extant rice mill chimneys in Georgetown County, for its unusual construction, and for its association with Fairfield, one of several productive plantations on the Waccamaw River. Fairfield was originally one of the holdings of Joseph Allston, one of the wealthiest and most successful planters on Waccamaw Neck. Allston also owned The Oaks, perhaps the largest and most productive rice plantation of its day. At his death in 1784 he left Fairfield to his son William, who had been a captain under Francis Marion in the American Revolution and was later a member of both the South Carolina House of Representatives and Senate. The younger Allston changed the spelling of his name from Allston to Alston to avoid confusion with other William Allstons in the Georgetown area and made his home at Clifton, a large plantation about a mile south of Fairfield. One of the first pounding mills in South Carolina, run by water power, was built at Fairfield c. 1790. That mill was built for Alston by Jonathan Lucas, who was one of the pioneers of the rice milling industry. It is not known whether this extant rice mill chimney served an early mill which was converted from water power to steam power. After Clifton burned c. 1800 Alston moved to Fairfield, where he remained until his death in 1839. His son, Charles Cotesworth Pinckney Alston, most often referred to as Charles Alston, Sr., inherited the plantation and planted rice there until his death in 1881. He produced 900,000 pounds of rice with 190 slaves at Fairfield and at Bellefield, also on the Waccamaw River, in 1850. The two plantations produced 950,000 pounds of rice in 1860. "Fairfield was a model plantation," Alston's nephew, J. Motte Alston, recalled in the 1890s. In the 1930s the Fairfield rice mill, with its steam engine, boiler, and other machinery, was dismantled and removed from its site on the Waccamaw River. It was taken to Dearborn, Michigan, reassembled, refurbished, and put back into operation as a museum exhibit in Henry Ford's Greenfield Village. Fairfield is now part of Arcadia Plantation.(1)

[X] See continuation sheet

9. Major Bibliographical References

See continuation sheet

☐ See continuation sheet

Previous documentation on file (NPS):

☐ preliminary determination of individual listing (36 CFR 67) has been requested
☐ previously listed in the National Register
☐ previously determined eligible by the National Register
☐ designated a National Historic Landmark
☐ recorded by Historic American Buildings Survey # _____
☐ recorded by Historic American Engineering Record # _____

Primary location of additional data:

☒ State historic preservation office
☐ Other State agency
☐ Federal agency
☐ Local government
☐ University
☐ Other

Specify repository:
S.C. Department of Archives & History
Columbia, SC

10. Geographical Data

Acreage of property Less than 1 Acre

UTM References

	Zone	Easting	Northing		Zone	Easting	Northing
A	17	665580	3696020	B			
C				D			

☐ See continuation sheet

Verbal Boundary Description

The boundary of the nomination is shown as the black line on the accompanying Georgetown County Tax Map, District 4, Map 1001, Parcel 1, drawn at a scale of 1"=1000'.

☐ See continuation sheet

Boundary Justification

The nominated property includes the rice mill chimney and its immediated surroundings.

☐ See continuation sheet

11. Form Prepared By

name/title J. Tracy Power, National Register Historian; Sherry Piland, Architectural Historian
organization S.C. Department of Archives and History date 15 September 1987
street & number P.O. Box 11669 telephone (803) 734-8608
city or town Columbia state South Carolina zip code 29211

NOTES

(1) Arcadia Plantation was individually listed in the National Register on 3 January 1978; the Fairfield rice mill chimney was not included in the boundaries of the nomination. Alberta Morel Lachicotte, Georgetown Rice Plantations (Columbia: The State Printing Company, 1955; Fifth Edition, 1970), pp. 22-26; George C. Rogers, Jr., The History of Georgetown County, South Carolina (Columbia: University of South Carolina Press, 1970), pp. 165, 267, 335, 495; N. Louise Bailey and Elizabeth Ivey Cooper, Biographical Directory of the South Carolina House of Representatives: Volume III: 1775-1790 (Columbia: University of South Carolina Press, 1981), pp. 35-38; N. Louise Bailey, Mary L. Morgan, and Carolyn R. Taylor, Biographical Directory of the South Carolina Senate 1776-1985: Volume I: Abbott-Hill (Columbia: University of South Carolina Press, 1986), pp. 62-64; Arney R. Childs, Editor, Rice Planter and Sportsman: The Recollections of J. Motte Alston, 1821-1909 (Columbia: University of South Carolina Press, 1953), pp. 42-43; facing p. 45; facing p. 46; 47; Agricultural and Slave Schedules, Seventh Census of the United States (1850), Georgetown County; Agricultural and Slave Schedules, Eighth Census of the United States (1860), Georgetown County; Interview with Fred Powell, Game Warden, Arcadia Plantation, Georgetown, South Carolina, 2 September 1987.

Fairfield Rice Mill Chimney
(Georgetown County Rice Culture, c.1750-c.1910 Muliple Property Listing)
Georgetown County, South Carolina.

Photographer: South Carolina Department of Archives and History Staff
Date: August 1987
Location of negative: South Carolina Department of Archives and History

View looking south.

Figure 1

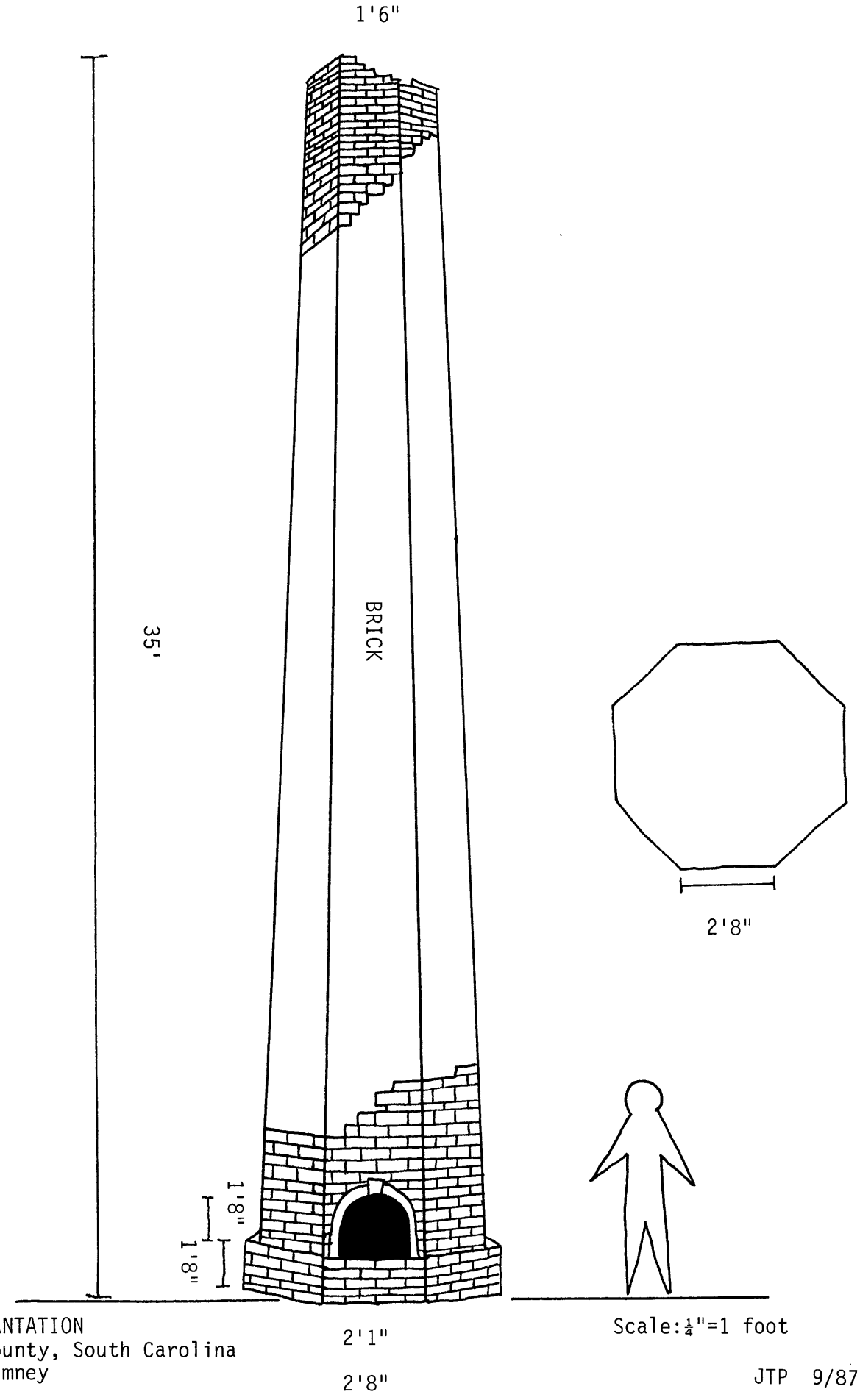

FAIRFIELD PLANTATION
Georgetown County, South Carolina
Rice Mill Chimney

Scale: ¼"=1 foot

JTP 9/87